19-205-0806: PRODUCTION TECHNOLOGY

- Module I

Kinematics of Machine Tools: Selection of range of speeds and feeds, layout of speeds, graphical representation of speed and structural diagrams, ray diagrams for machine tool gear boxes, speed chart, speed box design, feed chart, feed box design, gearing diagram, stepped and step less regulation of speeds, feed and speed mechanisms in lathe, milling and drilling machines.

- Module II

Non-traditional machining processes: Principles, machining unit, process characteristics and applications of Electro Discharge Machining, Electro Chemical Machining, Abrasive Jet Machining, Ultrasonic Machining, Electron Beam Machining, Laser Beam Machining, and Plasma Arc Machining-capability analysis of non traditional processes.

- Module III

Powder Metallurgy: Definition and basic concept of the powder metallurgy process, powder manufacture, characteristics of metal powders, mixing and blending, compacting, pre-sintering, sintering, hot pressing, secondary P/M operations like infiltration, impregnation, sizing, properties of P/M products, product applications, advantages & disadvantages.

- Module IV

Hydraulic operation of Machine Tools: Elements of a hydraulic circuit, JIC symbols hydraulic valves, flow, pressure and direction control valves, oil hydraulic circuits of shaping, drilling and grinding machines.

Estimation and Costing: estimation and costing in foundry shop, sheet metal shop, welding shop,and machine shop- simple examples in lathe, drilling, milling, shaping and grinding machines.

Powder metallurgy

Powder Metallurgy

- *Powder metallurgy is a process of making components from metallic powders.*
- Powder metallurgy is a branch of metallurgy which deals with the production of metal and nonmetal powders and subsequently manufacture of components by using these powders.
- It is process in which powdered materials are BLENDED,PRESSED into desired shape and then HEATED to bond surface.

Why Powder Metallurgy is Important

- PM parts can be mass produced to net shape or near net shape
- PM process wastes very little material - ~ 3%
- PM parts can be made with a specified level of porosity, to produce porous metal parts – *Filters, oil-impregnated bearings and gears*
- Difficult to fabricate parts can be shaped by powder metallurgy – *Tungsten filaments for incandescent lamp bulbs are made by PM*
- Certain alloy combinations and cermets can only be made by PM
- PM production can be automated for economical production

Limitations :

- High tooling and equipment costs
- Metallic powders are expensive
- Problems in storing and handling metal powders – Degradation over time, fire hazards with certain metals
- Limitations on part geometry because metal powders do not readily flow well
- Variations in density may be a problem, especially for complex geometries

BASIC OPERATIONS INVOLVED IN POWDER METALLURGY

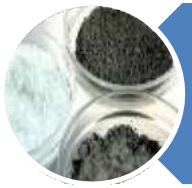

Preparation

Mixing and Blending

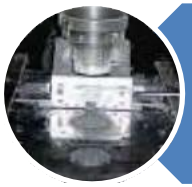

Compacting (Briquetting)

Sintering

BASIC STEPS OF THE PROCESS

1) Manufacturing of metal powders
2) Blending and mixing of powders
3) Compacting -*powders are compressed into desired shape to produce green compact, accomplished in press using punch-and-die*
4) Sintering – *green compacts are heated to bond the particles into a hard, rigid mass,Temperatures are below melting point*
5) Finishing operation

Powder Metallurgy

Steps involved in manufacturing powder metallurgical component

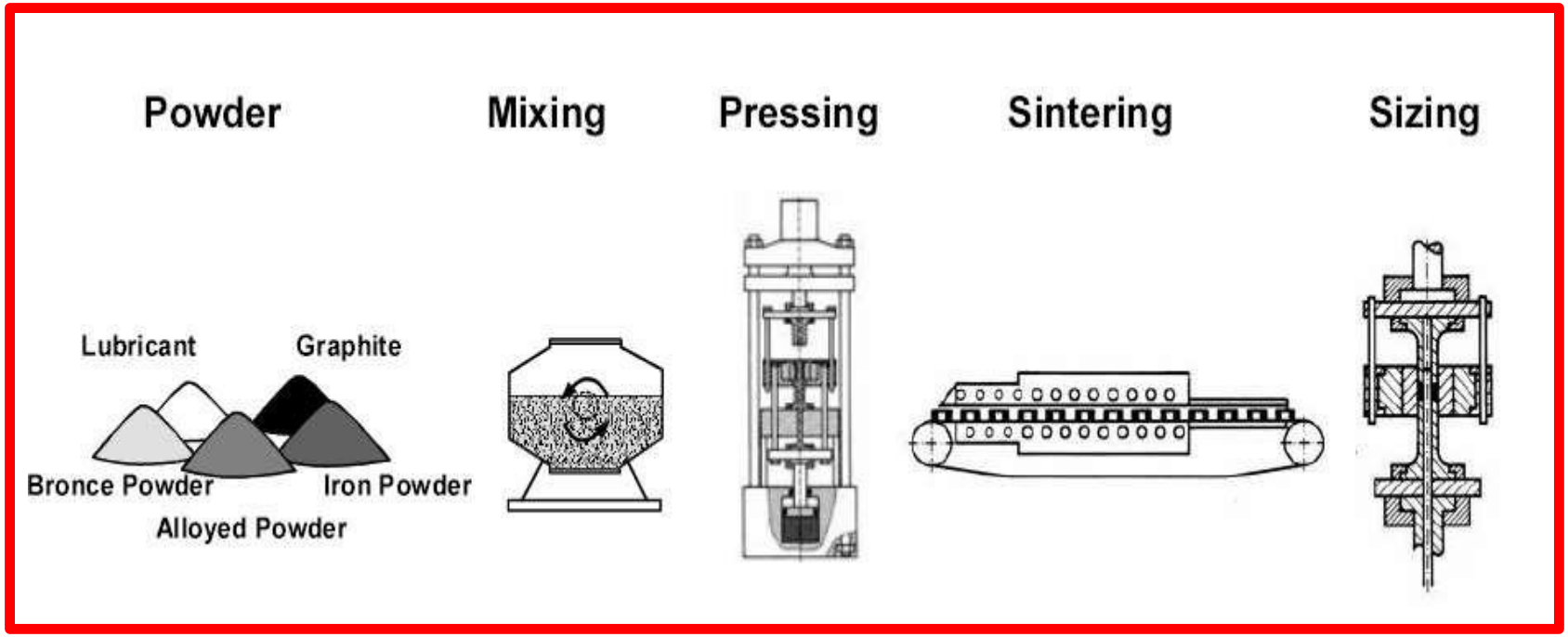

- **Characteristics of Metal Powder**
- (a) Particle shape
- (b) Particle size
- (c) Particle size distribution
- (d) Flow rate
- (e) Compressibility
- (f) Apparent density
- (g) Purity

(a) Particle Shape

The particle shape depends largely on the method of powder manufacture.

The shape may be spherical nodular, irregular, angular, and dendritic.

The particle shape influences the flow characteristics of powders.

Special particles have excellent sintering properties.

However, irregular shaped particles are good at green strength because they will inter look on compacting

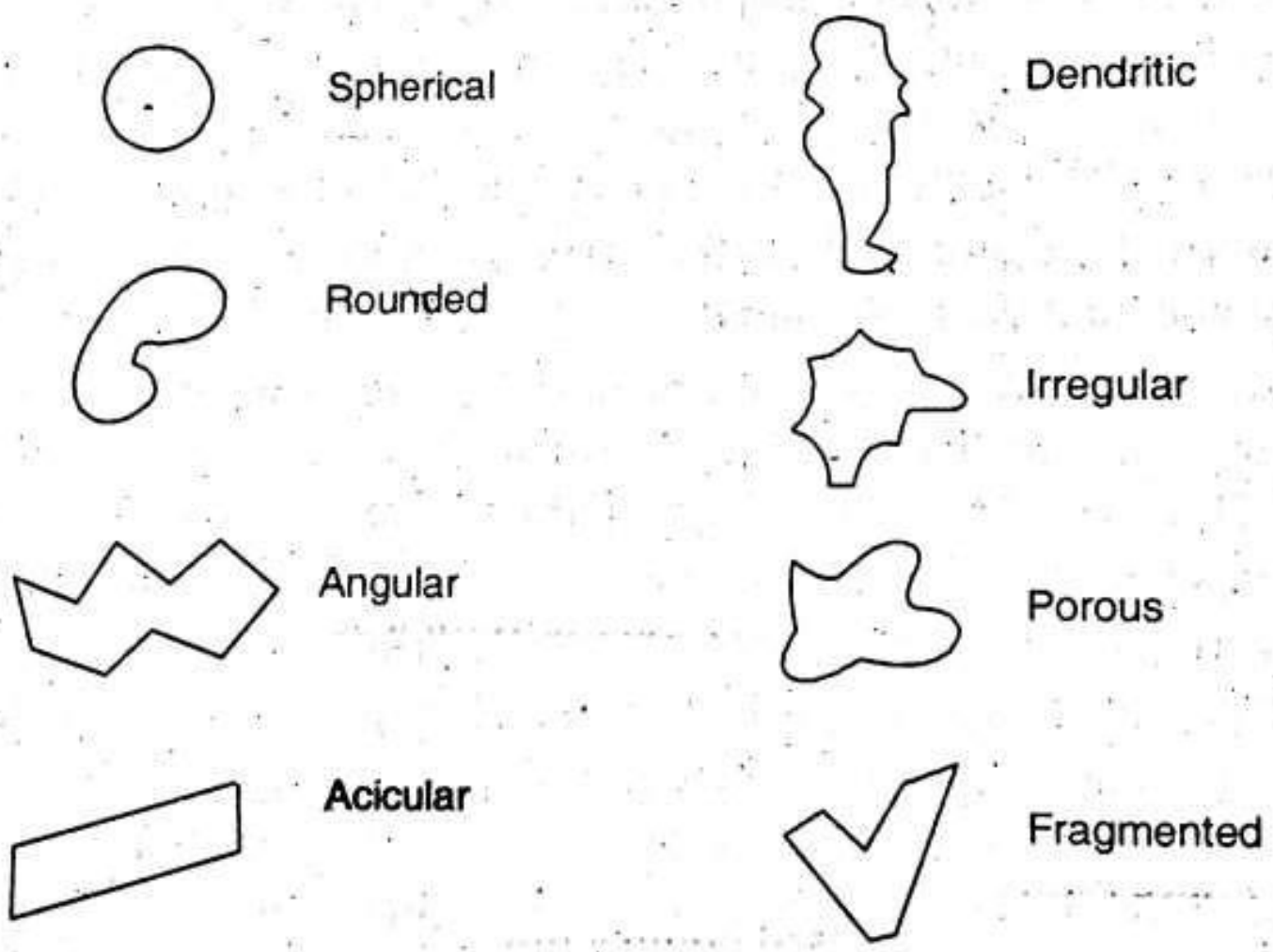

Fig. Particle Shapes.

(b) Particle Size:

- The particle size influences the control of porosity, compressibility and amount of shrinkage.
- It is determined by passing the powder through standard sieves or by microscopic measurement.

- (c) Particle Size Distribution:
- It is specified in term of a sieve analysis, the amount of powder passing through 100, 200 etc., mesh sieves. Particle size distribution influences the packing of powder and its behaviour during moulding and sintering.
- (d) Flow Rate:

It is the ability of powder to flow readily and confirm to the mould cavity.

Flow rate depends on particle size, shape, distribution , amount of absorbed gases, amount of moisture and co. of friction

- (e) Compressibility:
- It is defined as volume of initial powder (powder loosely filled in cavity) to the volume of compact part. It depends on particle size, distribution and shape.
- (f) Apparent Density:
- It depends on particle size and is defined as the ratio of volume to weight of loosely filled mixture.

- (g) Purity:
- Metal powders should be free from impurities as the impurities reduces the life of dies and effect sintering process. The oxides and the gaseous impurities can be removed from the part during sintering by use of reducing atmosphere.

PREPARATION OF POWDER

- MECHANICAL PULVERIZATION
- ATOMIZATION
- MACHINING
- SHOTTING
- GRANULATION

MANUFACTURING OF METAL POWDERS

- ***1. Atomization*.**
  - **Produce a liquid-metal stream by injecting molten metal through a small orifice**
  - **Stream is broken by jets of inert gas, air, or water**
  - **The size of the particle formed depends on:**
    - Temperature of the metal
    - Metal flowrate through the orifice
    - Pressure of jet
    - Nozzle size and jet characteristics

The process consists of main three stages

- Melting
- Atomization
- Solidification and cooling

➢ Atomization is done by high velocity water, compressed air or inert gas.

➢ The disintegrated particles are solidified in controlled atmosphere, vacuum , air or water.

Atomization is used mostly for low melting point metals/alloy such as brass, bronze, zinc, tin, lead and aluminium powders

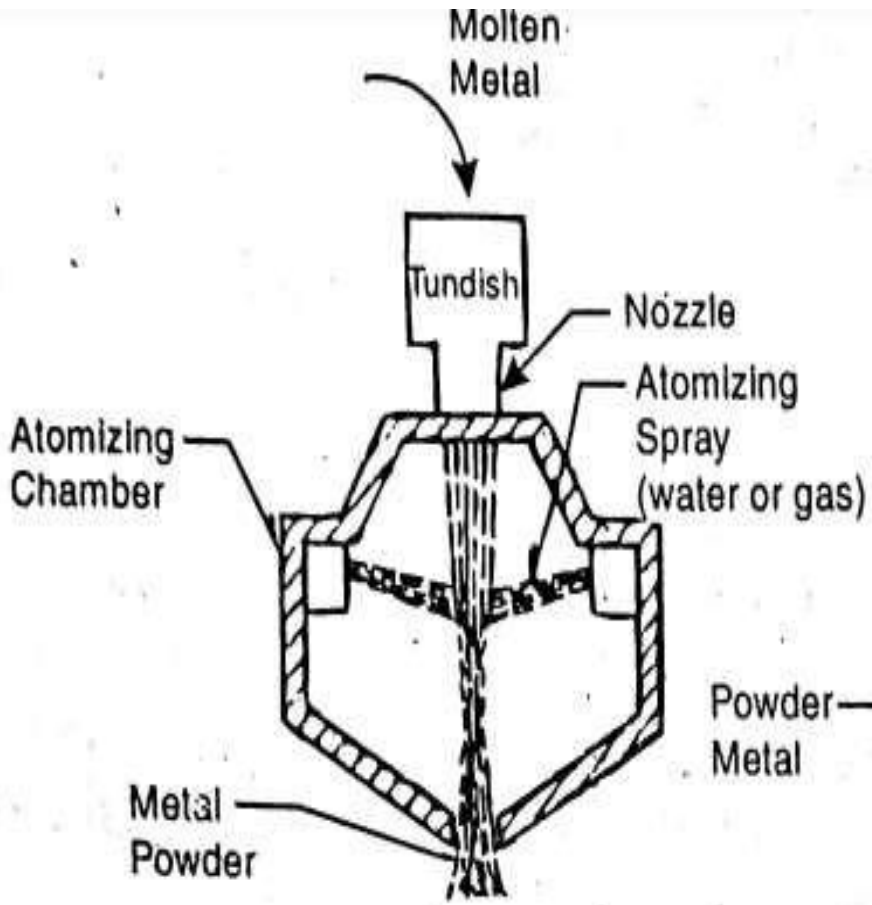

(a) Atomization

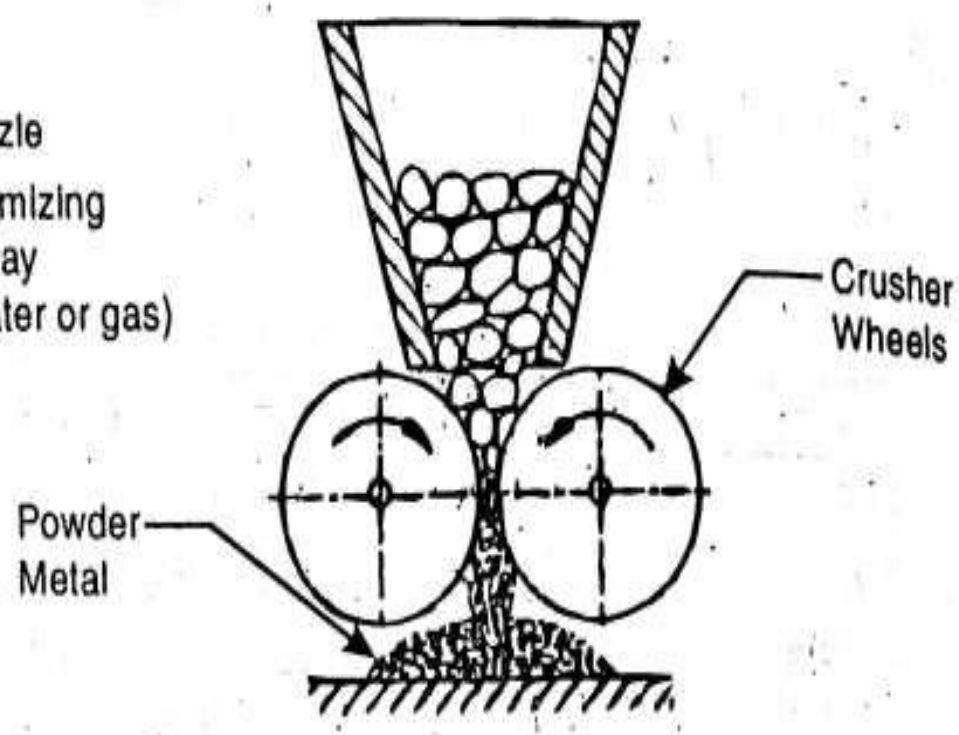

(b) Crushing (Gyratory Crusher)

MANUFACTURING OF METAL POWDERS

2) Crushing

The solid materials are crushed by hammers, jaw crushers, gyratory crushers, etc .the powder particles of brittle material are angular in shape and ductile material are flaky in shape.

Any material can be crushed to powder form; however, the method is very much suitable for brittle materials.

3) Milling:

Milling is the most important and widely used method for the production of powders of required grade and fineness.

Milling is done by using equipments such as ball mills, rod mills, eddy mills etc.

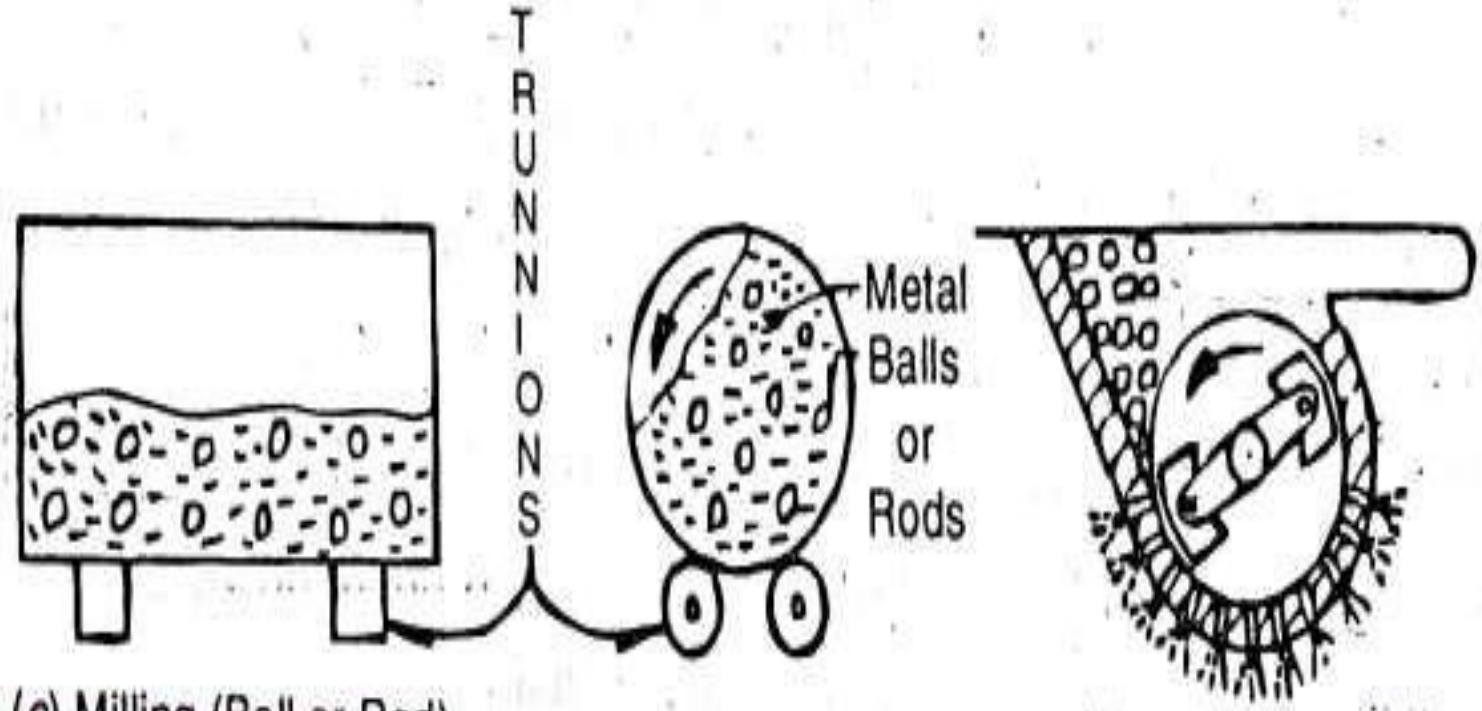

(c) Milling (Ball or Rod)

(d) Milling (Hammer)

In ball milling methods, the material to be powdered is tumbled or rotated in a container with large number of hard balls.

The speed of container is properly controlled so that the balls hit the material making particles finer and finer.

Any type of material can be powdered by milling method. However it is widely used for carbide –metal mixtures.

4) shotting:

In this method, the molten metal is poured through a sieve or orifice and is cooled by dropping into water.

This produces spherical particles of large size. This method is commonly used for metals of law melting points.

5.Reduction:

- Pure metal is obtained by reducing its oxide with a suitable reducing gas at an elevated temperature (below the melting point) in a controlled furnace.
- The reduced product is then crushed and milled to a powder.
- iron powder is produced this way

  $Fe_3O_4 + 4CO = 3Fe + 4CO_2$
- Copper powder by

  $Cu_2O + H_2 = 2Cu + H_2O$
- Tungsten, Molybdenum, Ni and Cobalt are made by the method

2) Blending and Mixing of Powders

The metal obtained from above methods may not be suitable for their further processing . To make them suitable, powder conditioning is done which involves mechanical, chemical or thermal treatments or alloying.

In this process ,through mixing of powders of same material or of different material is done for obtaining uniform distribution of particle sizes and to impart wide ranging physical and mechanical properties during compaction ,sintering and in the final sintered component.

MIXING AND BLENDING

- Making of alloyed powders by combining a homogenous mixture of carefully weighed and blended mixtures
- Combining metallic and non-metallic powders
- To ensure filling up of interstices
- Binders are added to powder
- Lubricant are added to the powders

Blending and Mixing of Powders

The starting powders must be homogenized

- **Blending - powders of the same chemistry but possibly different particle sizes are intermingled**

– **Different particle sizes are often blended to reduce porosity**

- **Mixing - powders of different chemistries are combined .**

Lubricants can be added during the blending process to improve the flow characteristics of the powder particles reducing friction between particles and dies,

.*Binders can be added to the mixture of the powder particles to enhance the green strength during the powder compaction process.*

Blending and Mixing of Powders

Various types of machines are used for mixing or blending; however a double cone or y cone mixer is more common.

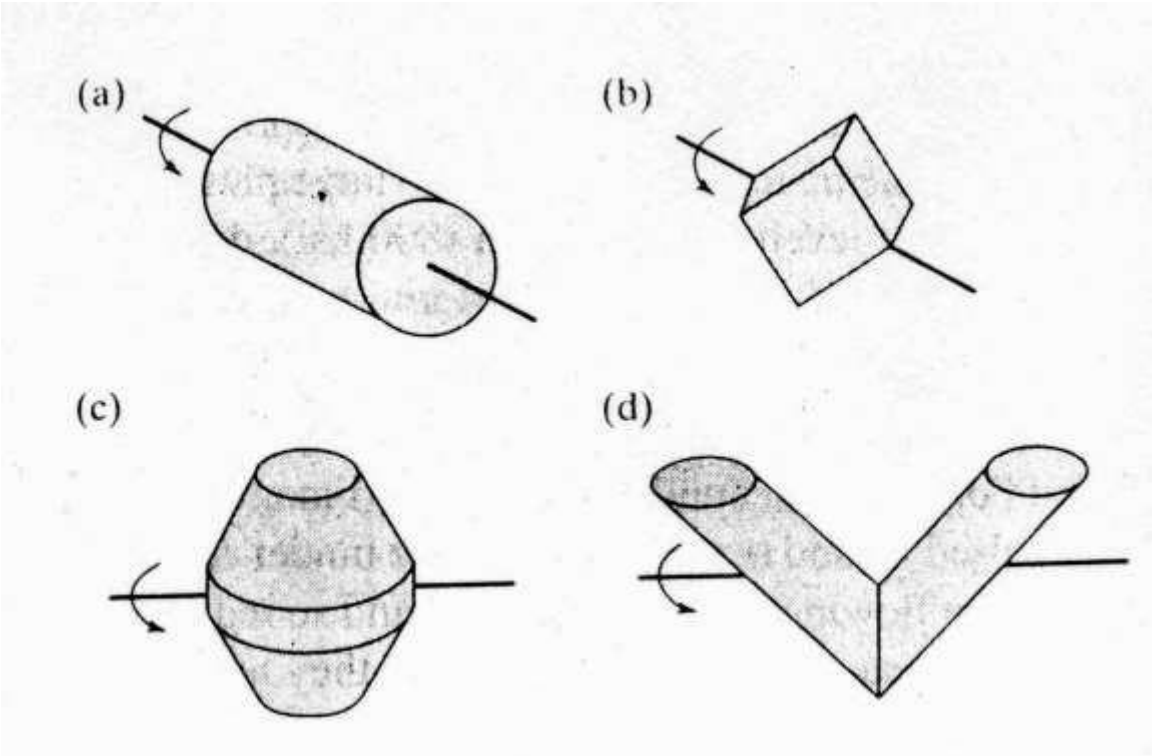

Some common equipment geometries used for blending powders
(a) Cylindrical, (b) rotating cube, (c) double cone, (d) twin shell

3)Compacting (Briquetting)

The main purpose of compacting is converting loose powder into a green compact of accurate shape and size by the application of *pressure*.

- *Green compact*
- *Cold welding*
- *Compaction Pressure :80-1600Mpa*

1. Pressing:

- Conventional compaction method is pressing, in this metal powders are placed in a die cavity and compressed to form a component shaped to the contour of the die.
- The workpart after pressing is called a green compact. The green strength of the part should be adequate for handling.

3)Compacting (Briquetting)

- The pressure used for producing green compact of the component vary from 80 Mpa to 1400 Mpa, depending upon the material and the characteristics of the powder used.
- Mechanical presses are used for compacting objects at low pressure. Hydraulic presses are for compacting objects at high pressure.
- The pressure is then applied on any one punch or simultaneously on both the punches to compact the powder.

3)Compacting (Briquetting)

After maximum compression the upper punch is removed and the compact is ejected by raising the lower punch, leaving it free for next similar operation.

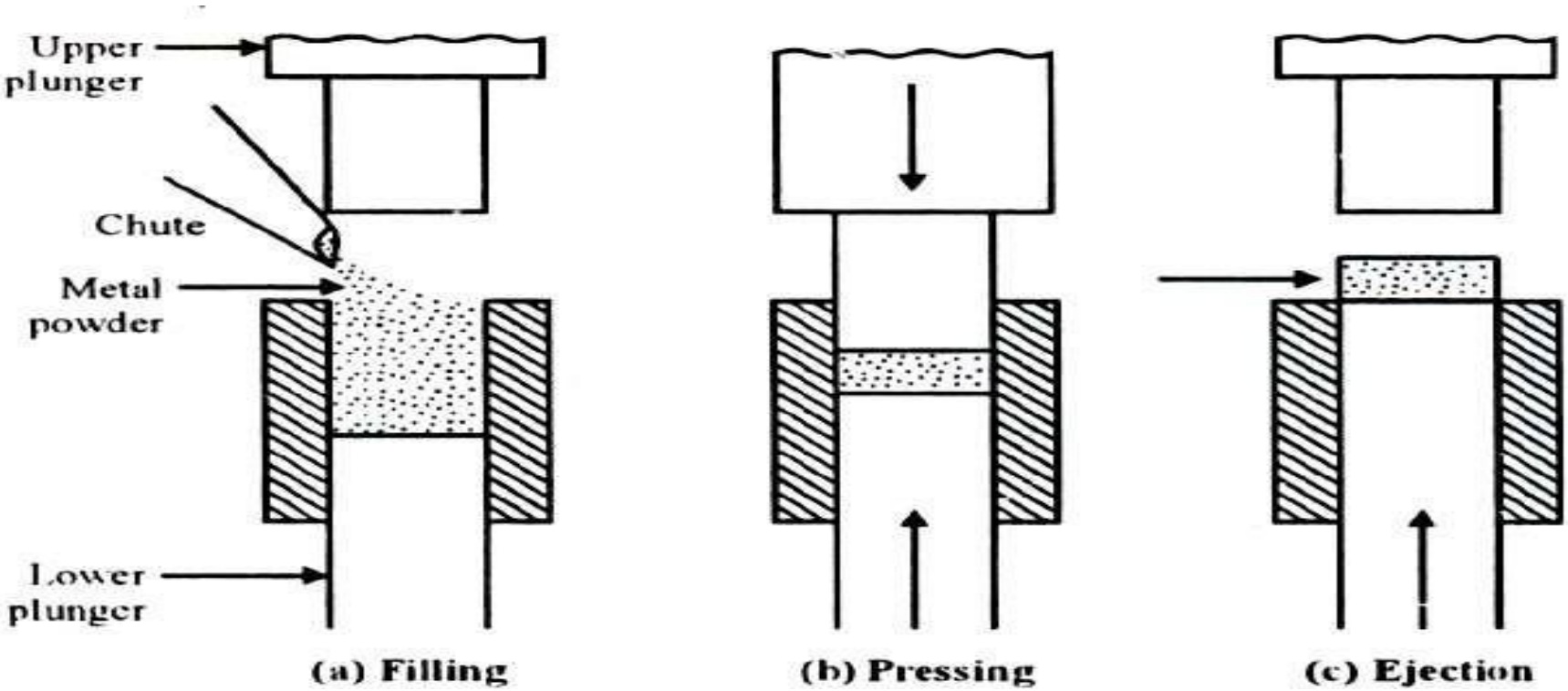

3)Compacting (Briquetting)

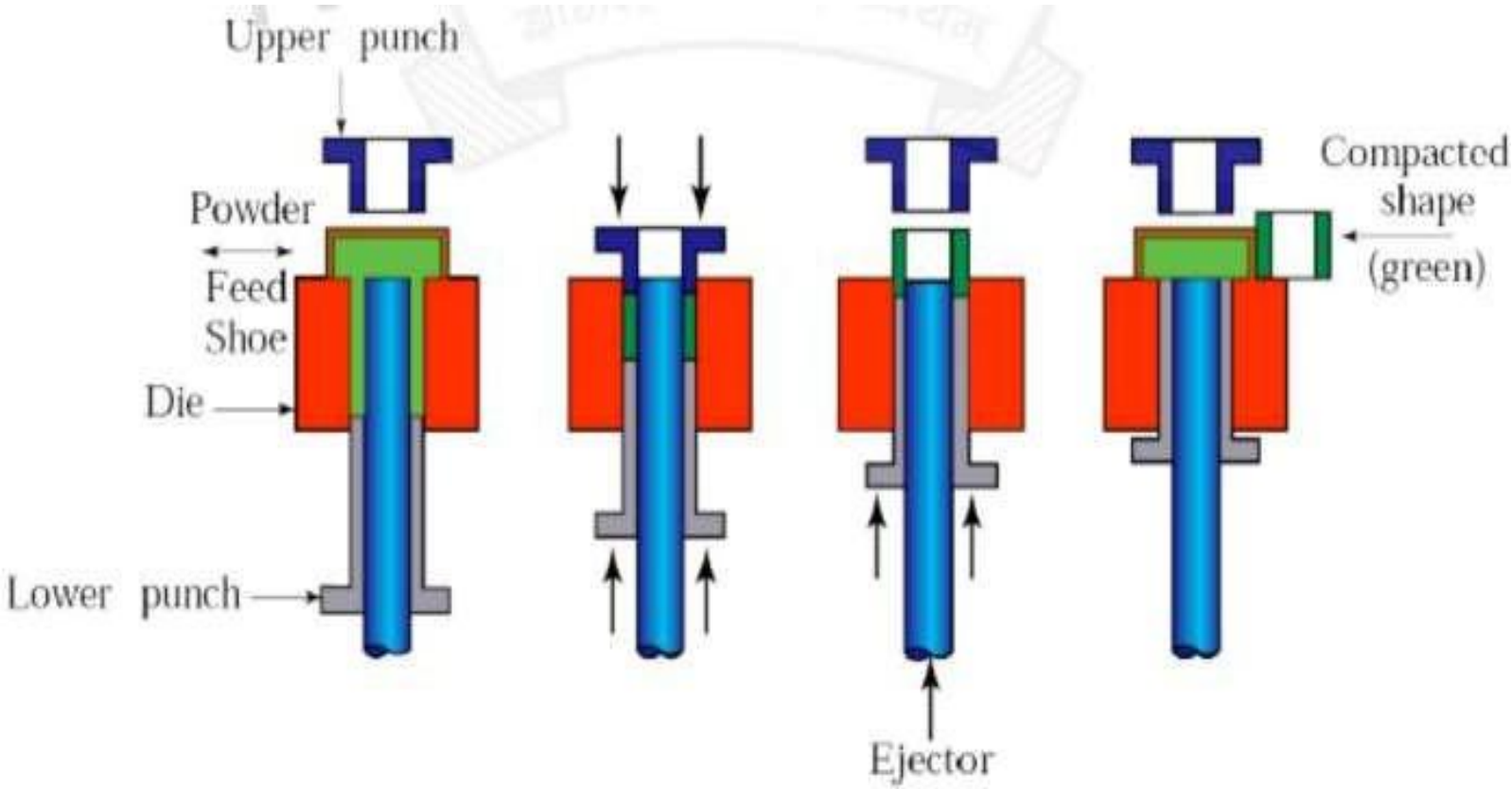

Figure 3.6.3 Compaction of metal powder to form a bushing [3]

COMPACTING (BRIQUETTING)

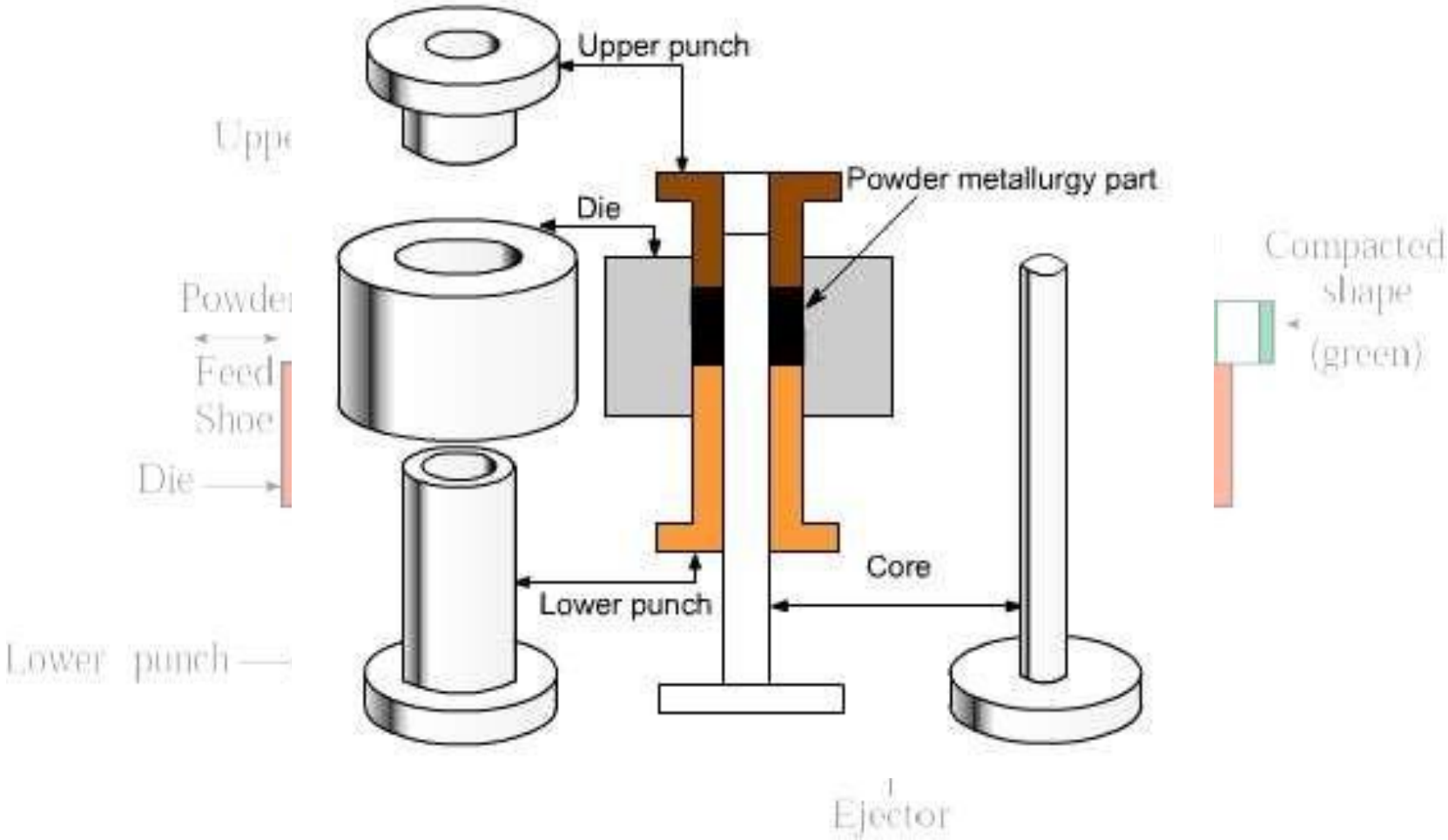

3)Compacting (Briquetting)

- 2. Centrifugal Compacting: In this method, the mould after it is filled with powder is centrifuged to get a compact of high and uniform density at a pressure of 3 Mpa. This method is employed for heavy metals such as tungsten carbide.
- 3.Slip Casting: In this method, the powder is converted into slurry with water and poured into the mould made of plaster of paris. The liquid in the slurry is gradually absorbed by the mould leaving the solid compact within the mould. The mould may be vibrated to increase the density of the compact.

3)Compacting (Briquetting)

- 4. Extrusion: This method is employed to produce the components with high density. Both cold and hot extrusion processes are for compacting specific materials.
- In cold extrusion, the metal powder is mixed with binder and this mixture is compressed into billet. The billet is charged into a container and then forced through the die by means of ram. The cross-section of product depends on the opening of the die. Cold extrusion process is used for cemented carbide drills and cutters.
- In the hot extrusion, the powder is compacted into billet and is heated to extruding temperature in non-oxidising atmosphere. The billet is placed in the container and extruded through a die.

3)Compacting (Briquetting)

- 5. Rolling: This method is used for making continuous strips and rods having controlled porosity with uniform mechanical properties.
- In this method, the metal powder is fed between two rolls which compress and interlock the powder particles to form a sheet of sufficient strength as shown in Fig.
- It then sintered , rerolled and heat treated if necessary. The metals that can be rolled are Cu, Brass, Bronze, Ni, Stainless steel .

3)Compacting

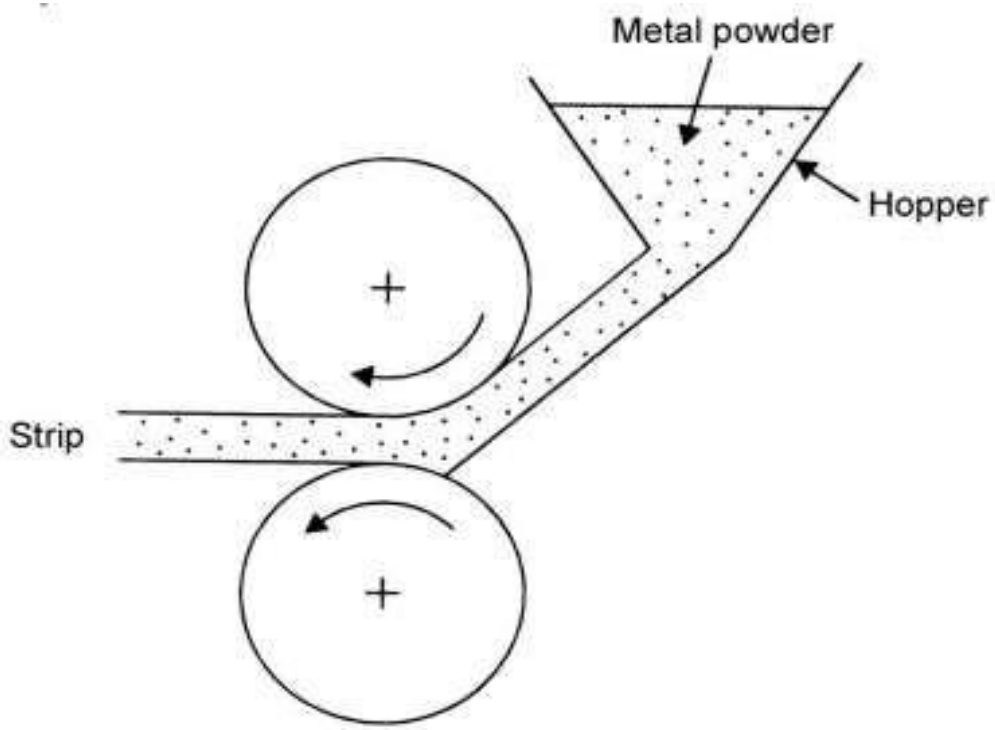

Fig. 4.3 Rolling

PRESSURE-DENSITY CURVE

EFFECT OF COMPACTION PRESSURE

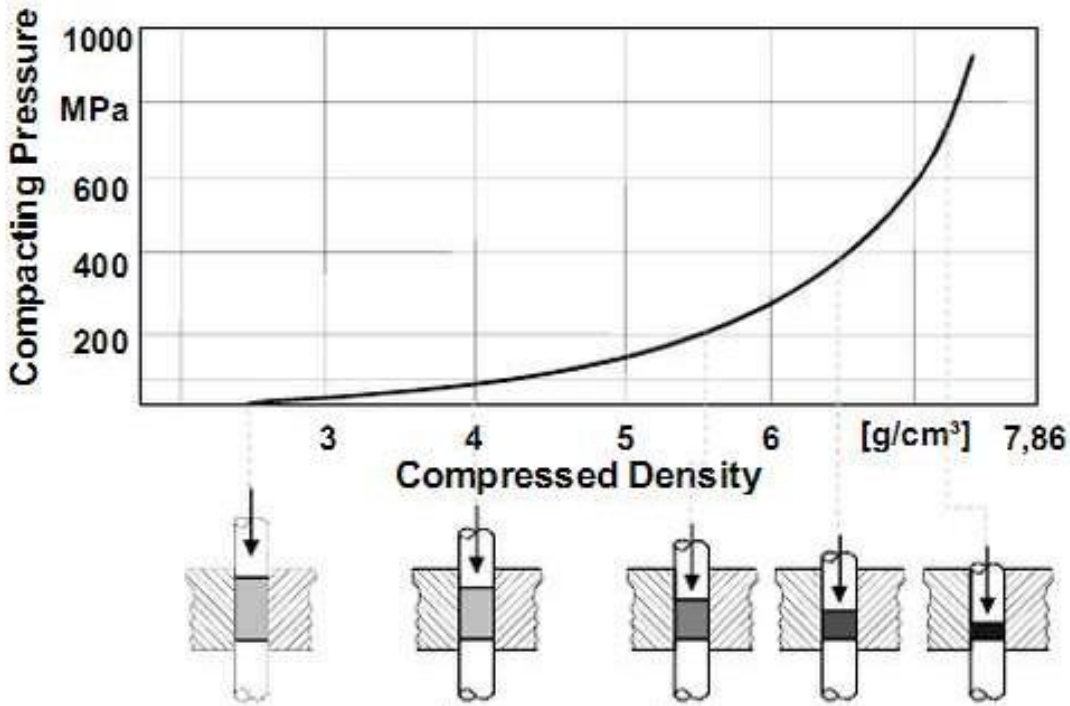

Compacting Pressure [MPa]:	0	80	200	400	800
Density [g/cm³]:	2,5	4	5,5	6,5	7,2

WITHDRAWAL PROCEDURE

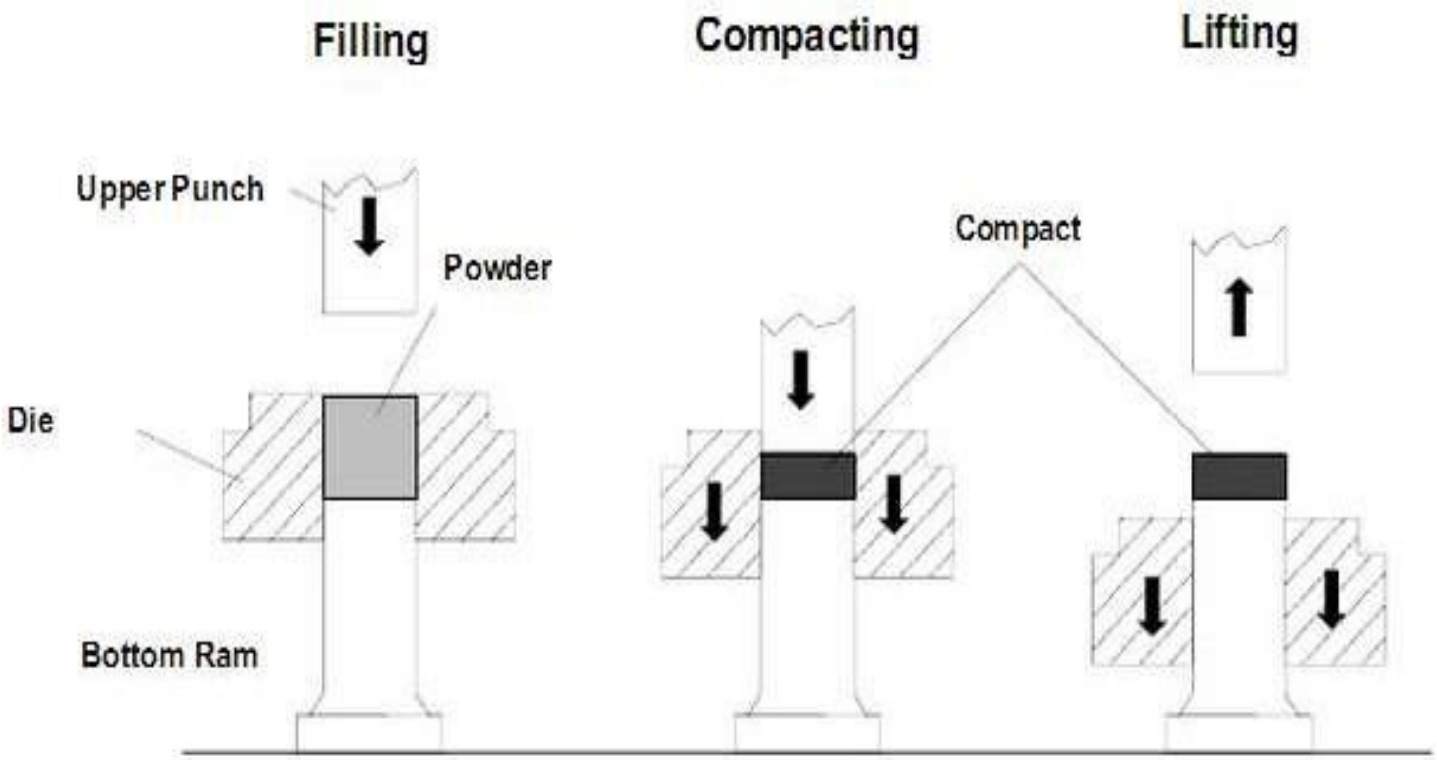

3)Compacting (Briquetting)

Most important effect of compacting are as follows

1) It reduces voids between powder particles and increases the density of compact.
2) It produces adhesion and cold welding of the powders and gives sufficient green strength.
3) It is plastically deforms the powder and allows recrystallization during subsequent sintering.

4) Sintering

Sintering is heating of green compact, below the melting temperature

Sintering is carried out to increase strength and hardness of a green compact and consists of heating the compact to a specific temperature *(below the melting temperature of the principle powder particles while well above the temperature that would allow diffusion between the neighbouring particles)* under controlled conditions with or without pressure for a definite time.

Sintering facilitates the bonding action between the individual powder particles and increase in the strength of the final part.

The heating process must be carried out in a controlled, inert or reducing atmosphere or in vacuum for very critical parts to prevent oxidation.

4) sintering

- The nature and strength of the bond between the particles depends on the mechanism of diffusion and plastic flow of the powder particles, and evaporation of volatile material from the compact.
- Bonding among the powder particles takes places in three ways:

(1) melting of minor constituents in the powder particles,

(2) diffusion between the powder particles, and

(3) mechanical bonding.

- The time, temperature and the furnace atmosphere are the three critical factors that control the sintering process.

4) sintering

Depending upon temperature of sintering, sintering process is classified as solid phase sintering or liquid phase sintering.

The most common method is solid phase sintering in which the green compacts are heated usually above the recrystallization temperature of low melting metal.

The liquid phase sintering is carried out above the melting point of one of the alloy constituents or above the melting point of an alloy formed during sintering.

4) sintering

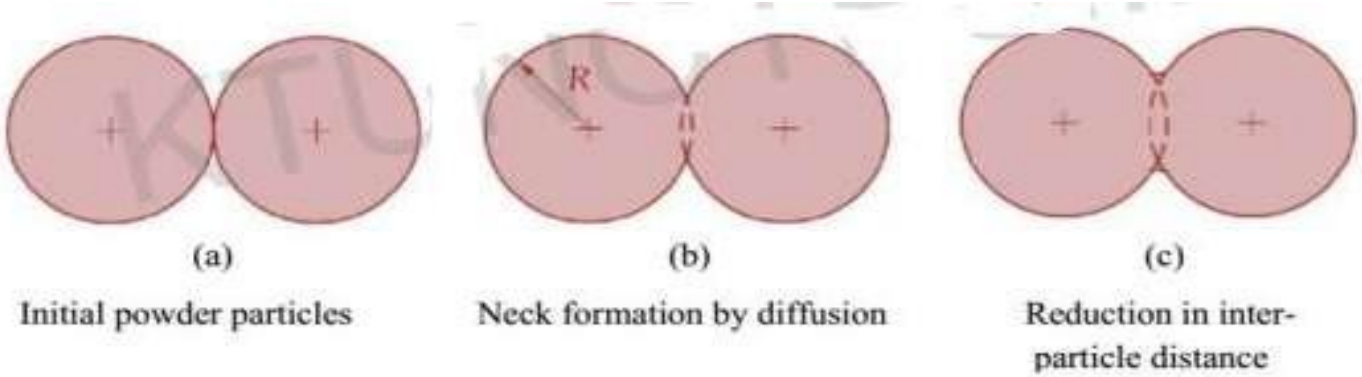

Figure 3.6.4 Schematic illustration of sintering of compact preform using solid-state diffusion between powder particles [1]

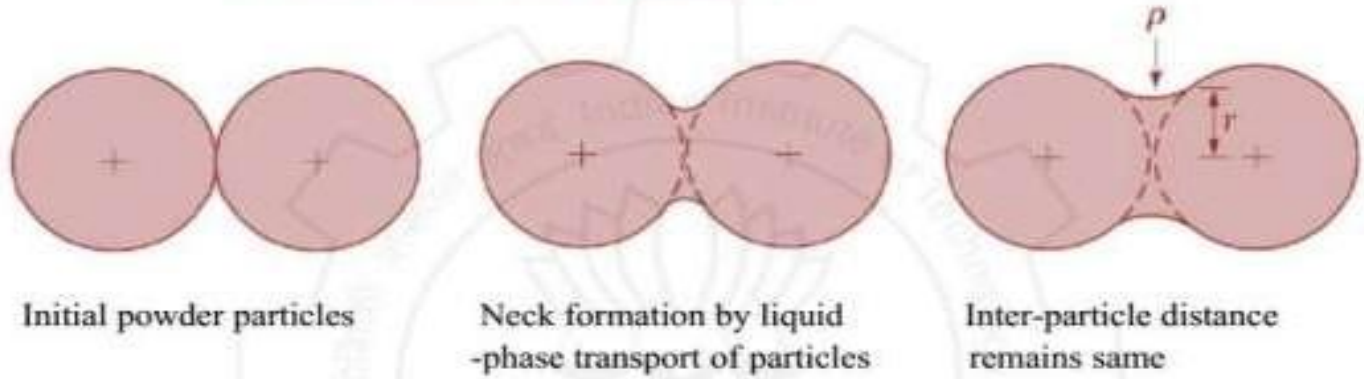

Figure 3.6.5 Schematic illustration of sintering of compact preform using liquid-phase transport between powder particles [1]

4) sintering

- Sintering Sequence on a Microscopic Scale

(1) Particle bonding is initiated at contact points;

(2) Contact points grow into "necks";

(3) Pores between particles are reduced in size;

(4) Grain boundaries develop between particles in place of necked regions.

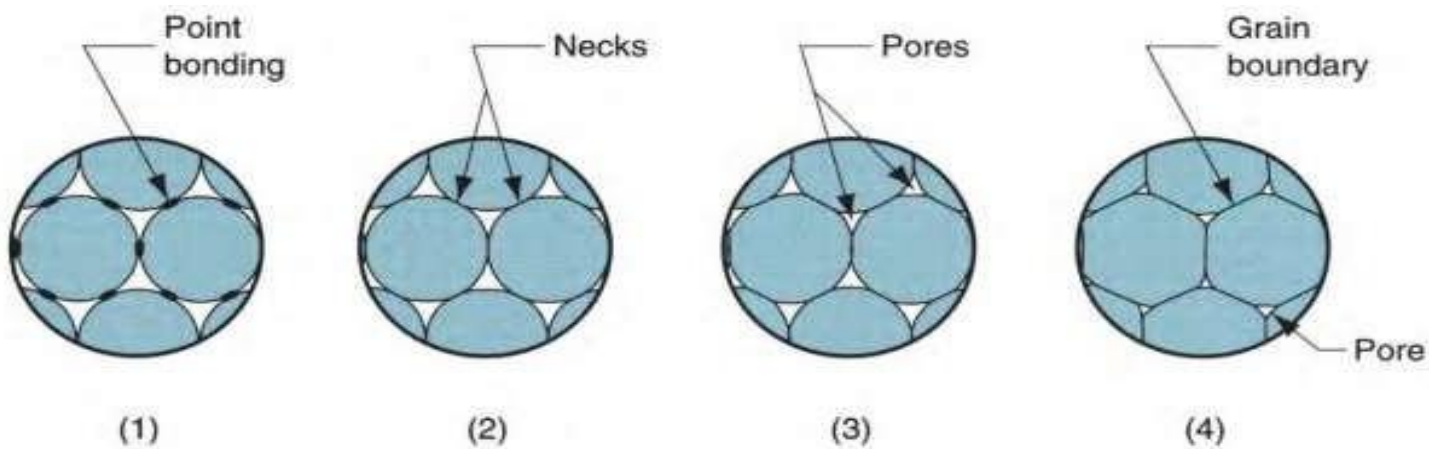

- Different stages in sintering process
  - Drying stage
  - Actual sintering - residual stresses are relaxed, allowing the particles to deform plastically. Voids tend to become closed causing shrinkage.
  - Controlled cooling

Sintering Cycle and Furnace

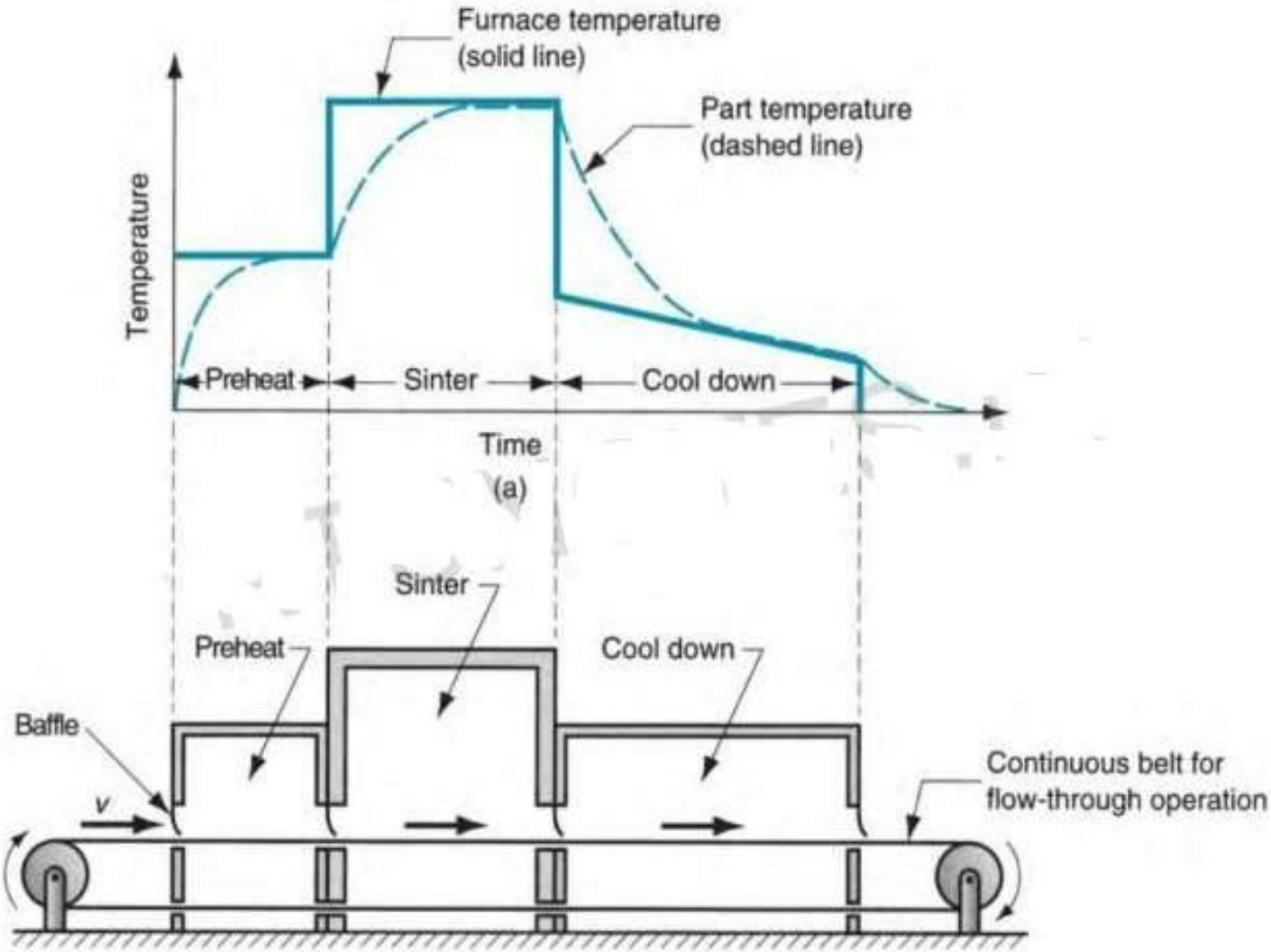

Pre-Sintering

- If a part made by PM needs some machining (drilling), it is very difficult if the material is hard and strong.
- these machining operations are performed easier by the pre-sintering operation which is done before sintering operation.
- In this , the compact is heated to a temperature well below the final sintering temperature.
- the compact will gain enough strength to be handled and machined without any difficulty. After this , the part undergoes the final sintering operation.

SINTERING TEMPERATURE AND TIME FOR VARIOUS METAL POWDERS

Material	Temperature (^{0}C)	Time (min.)
Copper, brass, bronze	760-900	10-40
Nickel	1000-1150	30-40
Stainless steels	1100-1290	30-60
Ferrites	1200-1500	10-600
Tungsten carbide	1430-1500	20-30
Molybdenum	2050	120
Tungsten	2350	480
Tantalum	2400	480

Hot Pressing

- It is a process of compacting metal powders at high temperature such that at the same time.
- Sufficient pressure is applied at the sintering temperature to bring the powder particles together and thus accelerate sintering.
- In this porosity can be completely eliminated.

SECONDARY OPERATIONS

- These are secondary operations intended to provide dimensional tolerances, physical and better surface finish. They are:
- IMPREGNATION
- INFILTRATION
- SIZING

SECONDARY OPERATIONS

- SIZING

Repressing the sintered component in a die to meet required dimensional accuracy , strength, surface finish .

This is done by placing the component in a master die and applying pressure. This is called sizing

SECONDARY OPERATIONS

- Porosity is a unique and inherent characteristic of PM technology . It can be exploited to create special products by filling the available pore space with oils, polymers, or metals
- Two categories:

1. Impregnation
2. Infiltration

Impregnation

- The term used when oil or other fluid is permeated into the pores of a sintered PM part. The parts are immersed in a tank of heated oil for a period of time to fill the pores. Application of vacuum aids the process.
- Common products are oil-impregnated bearings, gears, and similar components.
- Alternative application is when parts are impregnated with polymer resins that seep into the pore spaces in liquid form and then solidify to create a pressure tight part.

Infiltration

- Operation in which the pores of the PM part are filled with a molten metal
- The melting point of the filler metal must be below that of the PM part
- Heating the filler metal in contact with the sintered part so capillary action draws the filler into the pores – Resulting structure is nonporous, and the infiltrated part has a more uniform density, as well as improved toughness and strength

Application of P/M

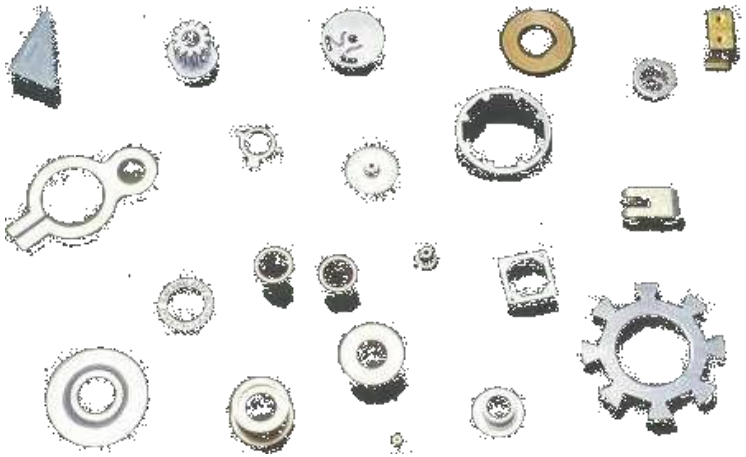

Different Applications

APPLICATIONS

1. LIGHT BULB FILAMENT
2. FRICTION MATERIALS,MANETIC MATERIALS, Refractory materials
3. SELF LUBRICATING BEARINGS
4. WC TOOL
5. ELECTRICAL CONTACTS FOR TRANSFER OF LARGE CURRENT

APPLICATIONS

- **Self-Lubricating Bearing and Filters**: **Porous bronze bearings are made by mixing copper and tin powder in correct proportions, cold pressed to the desired shape and then sintered.**
- **These bearings soak up considerable quantity of oil. Hence during service, these bearings produce a constant supply of lubricant to the surface due to capillary action.**
- **These are used where lubricating is not possible. Porous filters can be manufactured and are used to remove, undesirable materials from liquids and gases.**

Oil impregnated porous bearing (self lubricating bearing)

Bronze bearings are widely used and made up of cu and Sn (90:10) with addition of graphite and small amount of stearic acid

Graphite acts as solid lubricant and stearic acid is an effective pore- generating agent.

Processes:

1) Mixing
2) Cold compaction
3) Sintering
4) Repressing or sizing
5) impregnation

Oil Impregnated Porous Bearings (Self Lubricating Bearings)

The working of the bearing

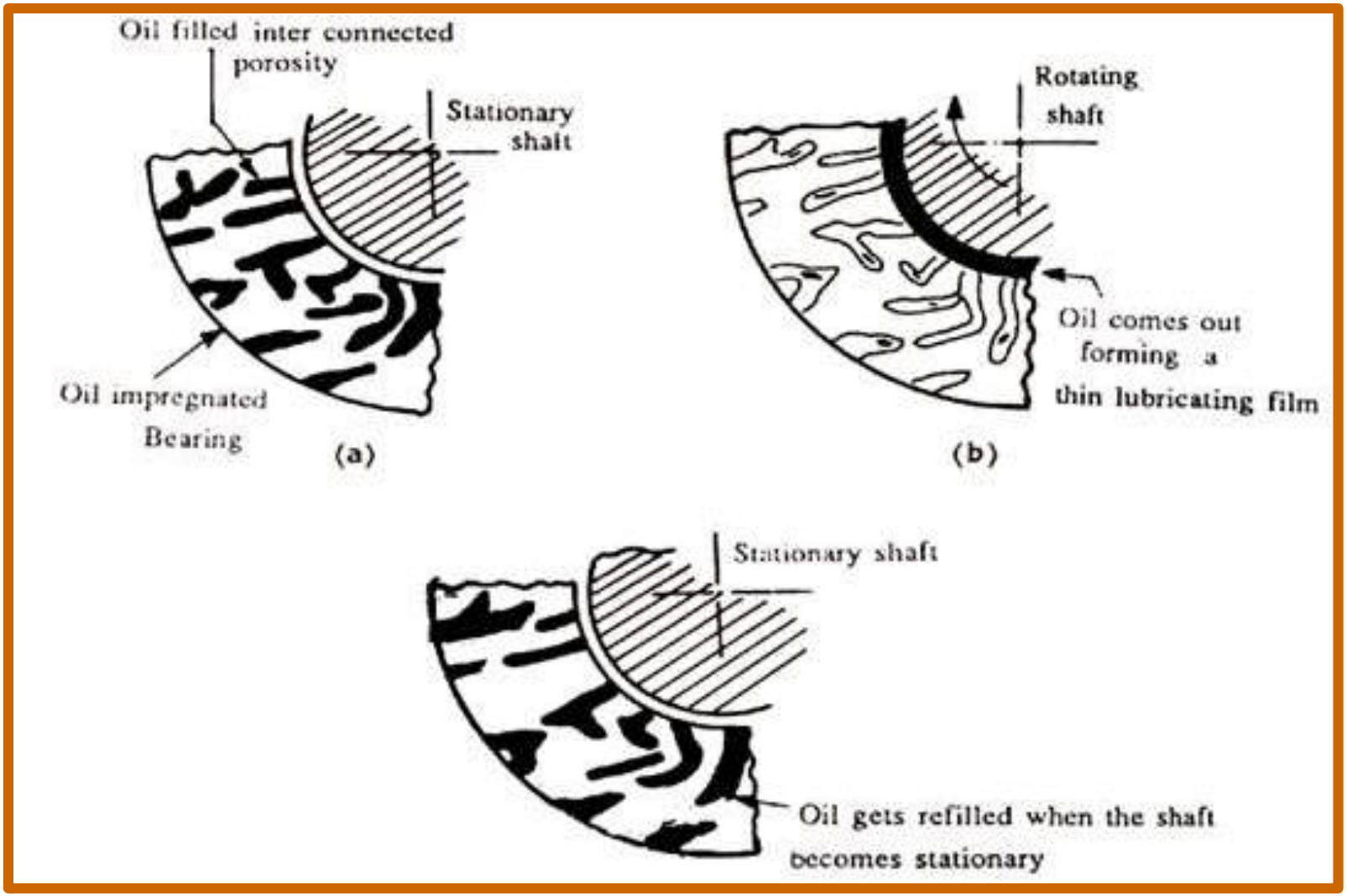

Oil impregnated porous bearing(self lubricating bearing)

Metal powder of cu and Sn with small amount of fine natural graphite are blended or mixed to obtain the desired alloy composition(90 cu: 10 sn)

This powder is cold compacted at pressures between 20 to 50 kg/mm2 to form green compact of desired shape and size.

These compacts are sintered in a reducing atmosphere at a temp. of about 800c.

At this temp. a tin rich liquid phase is formed which is absorbed by copper.

Distortion occurring during sintering can be eliminated by repressing(i.e. repressing) or machining.

The repressed or machined components are impregnated with cold or hot oil using pressure, vaccum or a combination of these.

Such a oil impregnated bearing is called self lubricating bearing

APPLICATIONS

- **Electrical Contacts and Electrodes**: Electrical contacts and resistance welding electrodes are made by powder metallurgy. A combination of copper, silver and a refractory metal like tungsten. Molybdenum and nickle provides the required characteristics like wear resistant, refractory and electrical conductivity.
- **Cemented Carbides**: These are very important products of powder metallurgy and find wide applications as cutting tools, wire drawing dies and deep drawing dies.

  These consist of carbides of tungsten, tantalum, titanium and molybdenum.

  The actual proportions of various carbides depend upon its applications, either cobalt or nickle is used as the bonding agent while sintering
- Friction Materials: These are made by powder metallurgy. Clutch liners and Brake bands are the example of friction materials.

ADVANTAGES & DISADVANTAGES

ADVANTAGES

- Production rates are high even for complex parts.
- Near net shape components are produced.
- Bi-metallic products, sintered carbides and porous bearings can be produced only by this process
- Skilled machinists are not needed, so labour cost is low

DIS ADVANTAGES

- High cost of metal powders compared to the cost of raw material used for casting or forging a component
- High cost of tooling and equipment
- Uniformly high – density products are difficult to produce
- Some powders (such as aluminum, magnesium, titanium and zirconium) in a finally divided state present fire hazard and risk of explosion.